# G-7030-LM45S-T

## PHASE Series

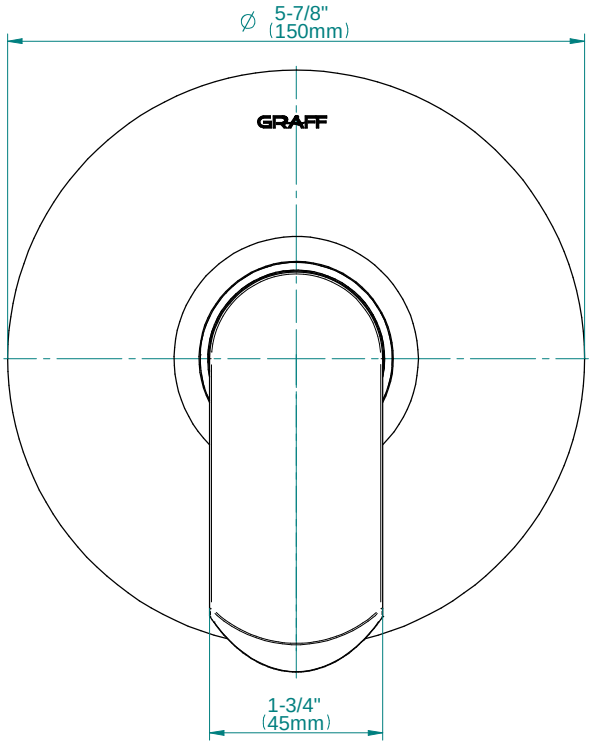


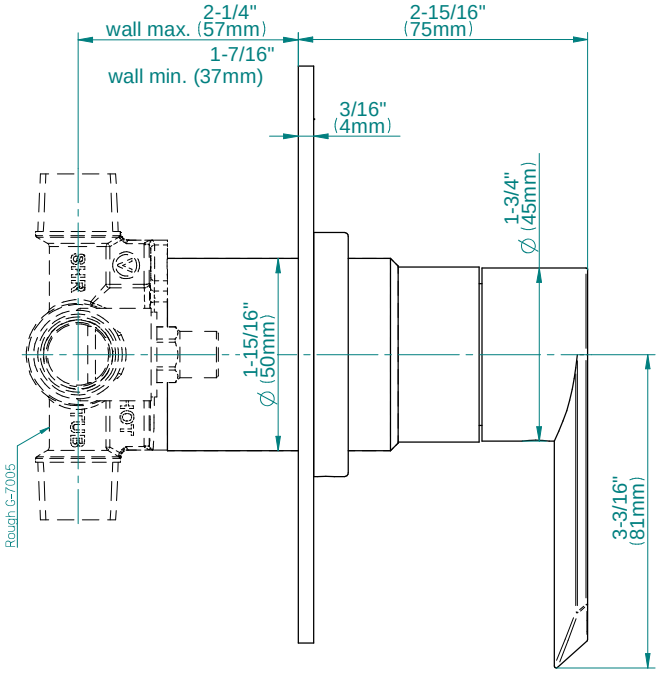


GRAFF®
CUTTING EDGE DESIGN